moda

Sampler Block Shuffle

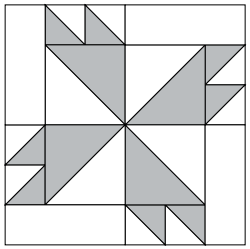

6" x 6" finished

Cutting

Print

4-2½" squares
4-2" squares

Background

4-2½" squares
2-2" squares
4-1½" x 3½" rectangles

- Easy Corner Triangle

Draw a diagonal line from corner to corner on the wrong side of the 4-2" background squares. Layer a marked square right sides together on a 2" print square. Sew ¼" from the diagonal line on each side. Cut on the diagonal line. Press open to make 2 triangle-squares. Trim to 1½" x 1½". Make 8 total.

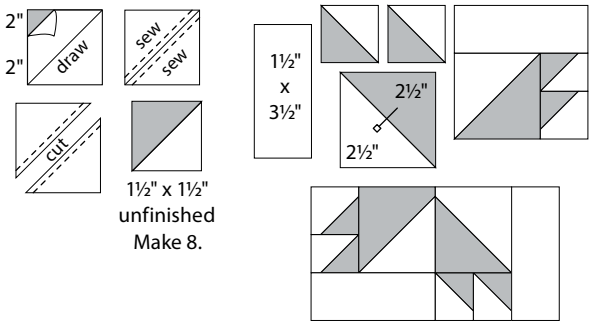

Color Option

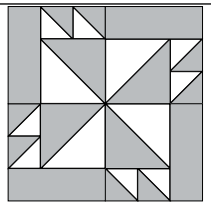

kate spain

To learn more, visit: katespain.com

28

moda MODAFABRICS.COM #showmethemoda

moda

Sampler Block Shuffle

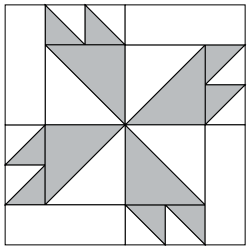

6" x 6" finished

Cutting

Print

4-2½" squares
4-2" squares

Background

4-2½" squares
2-2" squares
4-1½" x 3½" rectangles

- Easy Corner Triangle

Draw a diagonal line from corner to corner on the wrong side of the 4-2" background squares. Layer a marked square right sides together on a 2" print square. Sew ¼" from the diagonal line on each side. Cut on the diagonal line. Press open to make 2 triangle-squares. Trim to 1½" x 1½". Make 8 total.

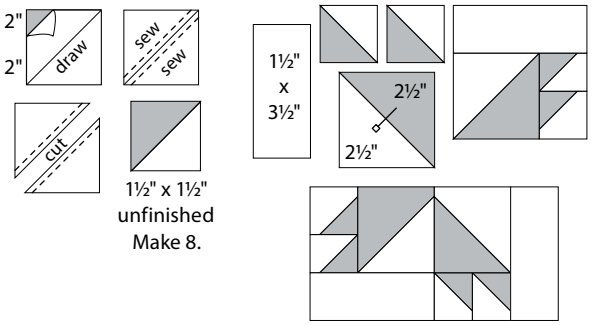

Color Option

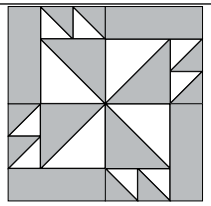

kate spain

To learn more, visit: katespain.com

28

moda MODAFABRICS.COM #showmethemoda